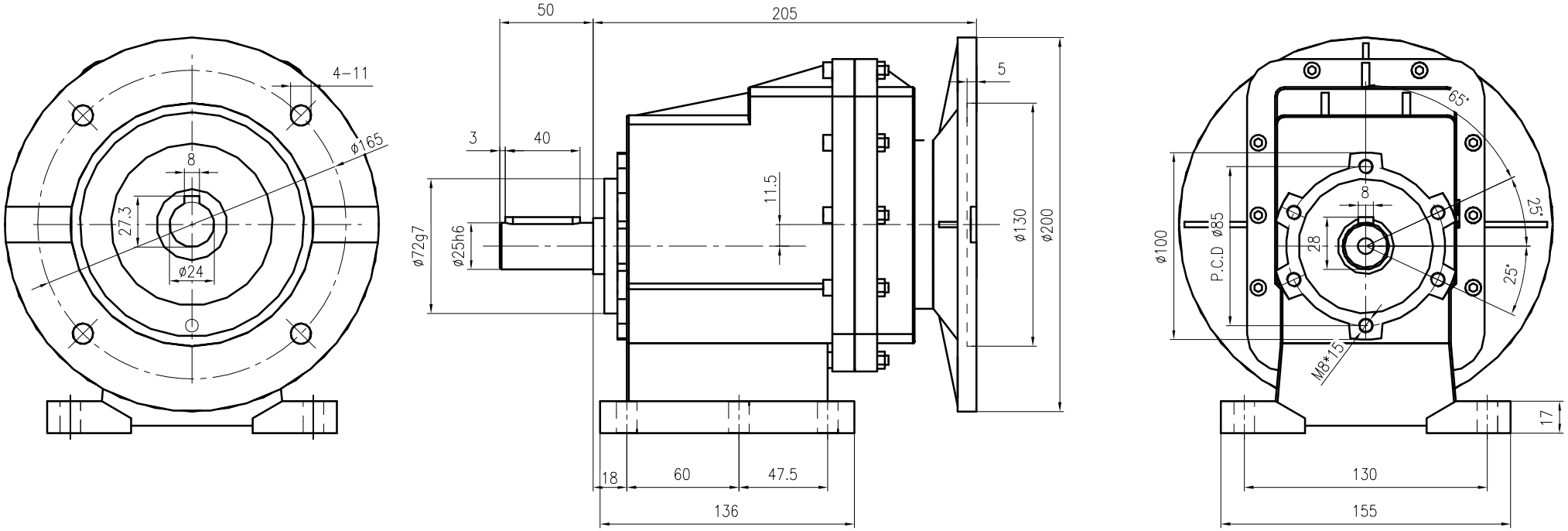

E-RC02B02-90B5